Caliper Type Micrometers

SERIES 343, 143

FEATURES

- With Ratchet Stop for constant force.
- With SPC output (series 343).

143-101

343-250

Technical Data

Accuracy: Refer to the list of specifications. (excluding quantizing error for digital models)
Resolution*: 0.001mm or .00005"/0.001mm
Graduation**: 0.01mm
Flatness: 0.3µm
Parallelism: (3+R/75)µm, R = max. range (mm)
*Fraction rounded down
Measuring faces: Carbide tipped
Display*: LCD
Battery*: SR44 (1 pc.), **938882**
Battery life*: Approx. 1.2 years under normal use
*Digital models **Analog models

Function of Digital Model

Origin-set, Zero-setting, Automatic power ON/OFF, Data hold, Data output, inch/mm conversion (inch/mm models)
Alarm: Low voltage, Counting value composition error

Optional Accessory for Digital Model

05CZA662: SPC cable with data switch (1m)
05CZA663: SPC cable with data switch (2m)

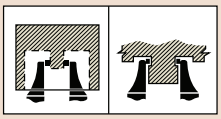

SPECIFICATIONS

Metric Digital model

Range	Order No.	Accuracy
0 - 25mm	**343-250**	±5µm
25 - 50mm	**343-251**	±6µm
50 - 75mm	**343-252**	±7µm
75 - 100mm	**343-253**	±8µm

Inch/Metric Digital model

Range	Order No.	Accuracy
0 - 1"	**343-350**	±.00025"
1" - 2"	**343-351**	±.0003"
2" - 3"	**343-352**	±.00035"
3" - 4"	**343-353**	±.0004"

Metric

Range	Order No.	Accuracy
0 - 25mm	**143-101**	±5µm
25 - 50mm	**143-102**	±6µm
50 - 75mm	**143-103**	±7µm
75 - 100mm	**143-104**	±8µm
100 - 125mm	**143-105**	±9µm
Models with a range up to 300mm are available.		

Inch

Range	Order No.	Accuracy
0 - 1"	**143-121**	±.00025"
1" - 2"	**143-122**	±.0003"
Models with a range up to 3" are available.		

DIMENSION

Unit: mm

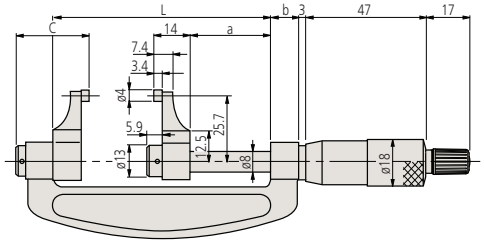

Analog model

Range	L	a	b	c
0 - 25mm	59.8	31.8	10.6	28.6
25 - 50mm	84.8	31.8	10.6	28.6
50 - 75mm	109.8	31.8	10.6	28.6
75 - 100mm	134.8	31.8	10.6	28.6
100 - 125mm	159.8	31.8	10.6	28.6
125 - 150mm	184.8	31.8	10.6	28.6
150 - 175mm	209.8	31.8	10.6	28.6
175 - 200mm	234.8	31.8	10.6	28.6
200 - 225mm	255.8	27.8	14.5	32.5
225 - 250mm	280.8	27.8	14.5	32.5
250 - 275mm	305.8	27.8	14.5	32.5
275 - 300mm	330.8	27.8	14.5	32.5

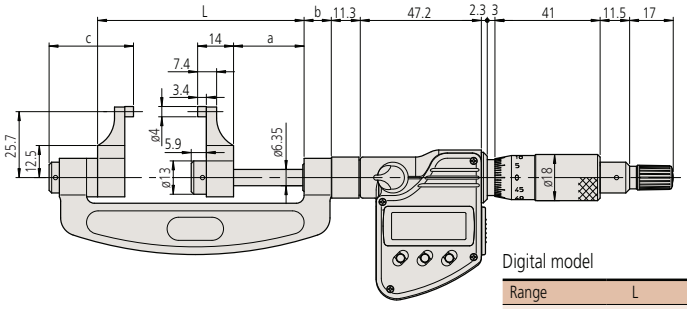

Digital model

Range	L	a	b	c
0 - 25mm	55.5	27.5	10.6	32.9
25 - 50mm	80.5	27.5	10.6	32.9
50 - 75mm	105.5	27.5	10.6	32.9
75 - 100mm	130.5	27.5	10.6	32.9